PYRANOMETER SPECIFICATION SHEET

MS-40 Pyranometer

Class C, Spectrally Flat

5 Years Standard Warranty | ISO.17025 Calibration | Class C ISO.9060:2018 Compliant

Overview

The MS-40 is an ISO 9060:2018 Class C pyranometer based on EKO's universal sensor platform. It is the most cost-effective irradiance sensor to measure Solar irradiance across the entire solar spectrum and is designed for agro-meteorological networks and professional small scale PV sites.

Featuring an analog (mV) output, every MS and S-Series Pyranometer, including the MS-40, is compatible with the optional MV-01 ventilator & heater and albedo mounting kit and is manufactured with strict quality controls and performance standards.

EKO provides a unique calibration compliant with the international standards defined by ISO 17025 and IEC 9847. The sensor also has a 5-year warranty with a two year recommended recalibration interval and no requirement to change the desiccant.

Features

- Class-leading & competition-beating response time
- Unbeatable reliability, with a 5 Year warranty & 2-year recommended recalibration interval
- Most cost-effective irradiance sensor for agro-meteorological networks
- Compatible with MV-01 external heating & ventilation unit to reduce condensation, dust, and snow accumulation on the glass dome.

ISO Specifications

ISO 9060:2018 Parameters	CLASS C	MS-40
Response time 95%	<30s	<18s
Zero offset A - Thermal radiation (200W/m²)	± 30W/m²	± 12W/m²
Zero offset B - Temperature change (5K/hr)	± 8W/m²	± 5W/m²
Zero offset C - Complete zero off-set	± 41W/m²	± 17W/m²
Non-stability (change/year)	± 3%	< 1.5%
Non-linearity (100 to 1000W/m²)	± 3%	± 1%
Directional response (at 1000W/m² | 0 to 80°)	± 30W/m²	± 20W/m²
Spectral error	± 5%	± 0.2%
Temperature response (-20°C to 50°C)	-	± 4%
Tilt response (0-90° | 1000W/m²)	± 5%	± 1%
Additional signal processing error	± 10W/m²	N/A

Accessories

Solar Monitoring Station

Combine the class-leading MS-60 with EKO's ultra-accurate MS-57 pyrheliometer & the STR-Series automated sun tracker for second-to-none GHI, DHI & DNI measurements for PV site evaluation, performance monitoring, and cell optimisation.

MS-Albedo Kit

The MS-Albedo kit can be used with any combination of MS or S-Series EKO pyranometers, compliant with IEC 61724-1:2021, to be deployed for albedo or reflected irradiance measurements for Bi-facial PV applications. The robust aluminium and stainless steel parts provide a reliable solution for easy, on-site assembly.

MV-01

Meet IEC 61724-1 standards with the MV-01 ventilator and heater, an optional add-on that helps to reduce sensor soiling and keeps the MS-40S free from dew, ice and snow. Proven in challenging environmental conditions, the MS-40S plus MV-01 is the go-to option globally for rooftop solar stations, solar parks of all sizes, and large weather monitoring sensor networks.

Applications

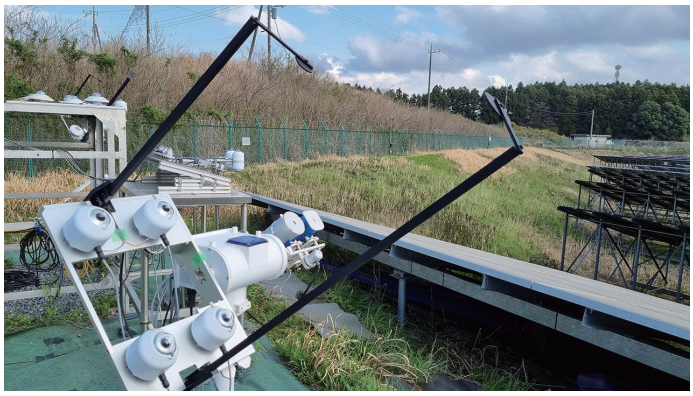

Designed for most cost effective irradiance sensors for agriculture, PV commercial/rooftop applications and other multiple weather monitoring application.

Related Prodcuts

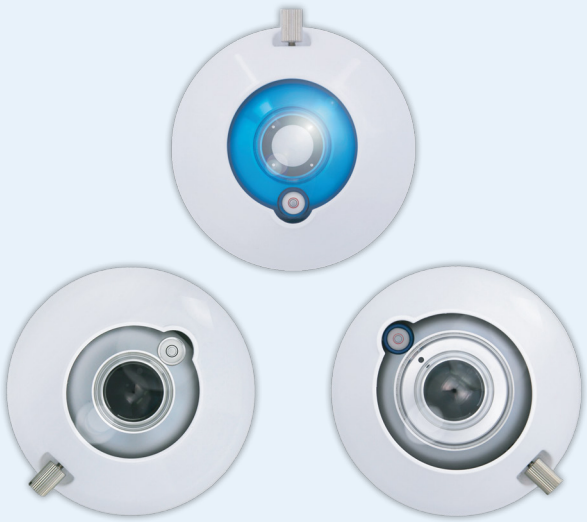

S-Series Pyranometers

The IEC 61724-1 compliant and ISO 9060:2018 class-leading range of S-Series Pyranometers from EKO Instruments set a new standard in pyranometer performance and design, delivering unbeatable accuracy, reliability, and value.

The S-Series features onboard diagnostics, a 5-year warranty, 5-year recalibration interval, a unique 3-channel digital/analog interface, and superior electronic protection in every class, ideal for monitoring photovoltaic system performance, scientific research, meteorological applications, and more.

Explore EKO now, or get in touch to learn more about the Class A MS-80S and MS-80SH, the Class B MS-60S and Class C MS-40S, the most accurate, reliable and robust family of pyranometers in the world.

MS-40 Technical Features

Wavelength Range (nm)	285 to 3000
Maximum Operational Irradiance	2000
Operating temperature	-40 to 80°C
Power Consumption	0 W
Ingress Protection	IP 67
Calibration traceability / uncertainty	ISO 17025 / WRR / < 0.7% (k = 1.96)
Standard Cable Length	10m (Optional lengths 20m, 30m, 50m)

Technical Diagram

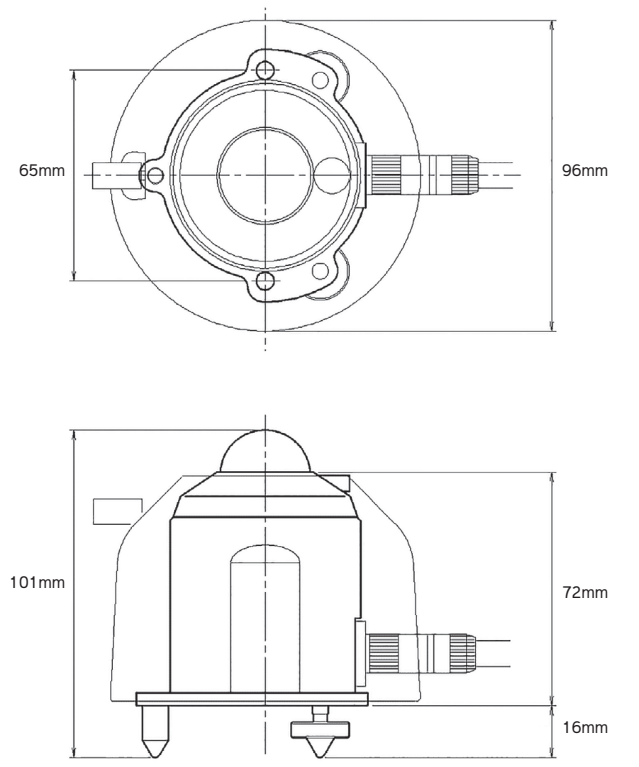

Learn More

Visit our website, contact our team, to find out more about the **MS-40** Pyranometer, related products, and the full range of Class and industry-leading products from EKO.

Explore EKO

Made in Japan for over 90 years, EKO solar energy sensors and environmental instruments are built on a legacy of innovation, an uncompromising commitment to quality, and industry-leading accuracy.

With a range of products and services to suit every project or application requirement, explore EKO now, or get in touch to find out how EKO Instruments can help you.

- Albedometers
- Pyranometers
- Pyrheliometers
- Spectro-Radiometers
- Sky Imagers
- DNI Sensors
- Pyrgeometers
- Thermal Cond. Testers
- Solar Monitoring Stations
- Sun Trackers
- Sensor Signal Converters
- Heat Flux
- UV Sensors
- Temperature Sensors
- Sky Scanners

EKO Instruments Co. Ltd
info@eko.co.jp
+81 3 3469 6713

EKO Instruments Europe B.V.
sales-eu@eko-instruments.com
+31 0 703 050 117

EKO Instruments USA Inc.
sales-usa@eko-instruments.com
+1 408 977 7751

EKO Instruments South Asia
sales-in@eko-instruments.com
+91 986 904 7721

EKO Instruments Sales China
sales-asia@eko-instruments.com
+81 3 3469 6713

EKO Instruments Sales MENA
sales-mena@eko-instruments.com
+212 661 418 870

MADE IN JAPAN
eko-instruments.com